Reg. No. | | | | | | | | | | | [13EC64/12EC64]

SIXTH SEMESTER B.TEH/B.E UNIVERSITY EXAMINATION, JUNE – 2016

DIGITAL VLSI DESIGN

Time: 3 Hours **Maximum Marks:70**

Instructions: Answer any FIVE full questions

1. a. Explain with necessary circuit diagram and expression, the body effect in CMOS circuits. How it affects the threshold voltage?Explain **04**

b. Derive the CMOS-inverter dc characteristics graphically, from P device and n-device characteristics and show all operating regions. **10**

2. a. Compare CMOS and Bipolar technologies. Describe the working of BICMOS inverter. **10**

b. Discuss the effect of channel length modulation on the performance of an NMOS transistor. **04**

3. a. Explain the fabrication steps in p-well MOS fabrication. **08**

b. For the given multilayer MOS structure calculate the total input capacitance in terms of □Cg ((5 μm) Technology) **06**

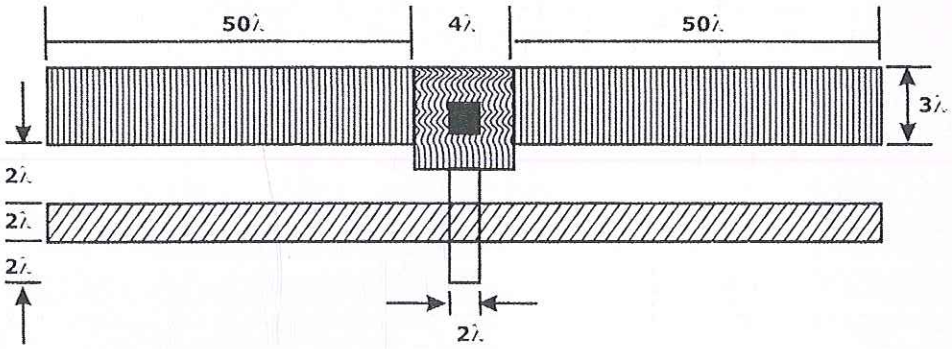

Given capacitance value in PFx10^{-4}/ μm^2

Cate to channel	4
Diffusion (active)	1
Pdysilicon to substrate	0.4
Metal 1 to substrate	0.3

4. a. Draw the circuit diagram of 2 input COMOS NAND gate and its stick diagram. Explain the working of the circuit. **06**

b. Explain the terms (i) Rise time, (ii) Fall time (iii) Delay time. Derive the equation for rise time of inverter. **08**

5. a. What is scaling of MOS circuits? **04**

b. Provide scaling factors for gate area, gate delay, sat current. **06**

c. Discuss the limitations of scaling. **04**

6

6.	**a.**	Explain the working principle of dynamic CMOS logic and clocked CMOS logic based NAND gate.	**08**
	b.	Write the layout for the logic expression $Y = \overline{A + BC}$ using CMOS design.	**04**
	c.	Explain 2-input x-nor gate using pass transistor logic.	**02**
7.	**a.**	Design and draw the CMOS circuit for full adder.	**08**
	b.	Draw the circuit diagram of 1 bit comparator using.	**06**
		i. CMOS devices	
		ii. Pseudo NMOS devices	
8.		Explain three transistor dynamic and six transistor static (RAM)memory cells. Reason out the need for sense amplifier in the cell array. Also give the differences between static and dynamic RAM.	**14**